* 0000800000001 *

Cambridge Assessment International Education

Cambridge International AS & A Level

CANDIDATE NAME

CENTRE NUMBER

CANDIDATE NUMBER

2144557459

PHYSICS **9702/53**

Paper 5 Planning, Analysis and Evaluation **May/June 2025**

1 hour 15 minutes

You must answer on the question paper.

No additional materials are needed.

INSTRUCTIONS

- Answer **all** questions.
- Use a black or dark blue pen. You may use an HB pencil for any diagrams or graphs.
- Write your name, centre number and candidate number in the boxes at the top of the page.
- Write your answer to each question in the space provided.
- Do **not** use an erasable pen or correction fluid.
- Do **not** write on any bar codes.
- You may use a calculator.
- You should show all your working and use appropriate units.

INFORMATION

- The total mark for this paper is 30.
- The number of marks for each question or part question is shown in brackets [ ].

This document has **8** pages.

DC (PQ) 354289
© UCLES 2025

[Turn over

1 Fig. 1.1 shows a thin coil of cross-sectional area A and length l connected to a resistor of resistance S and two terminals.

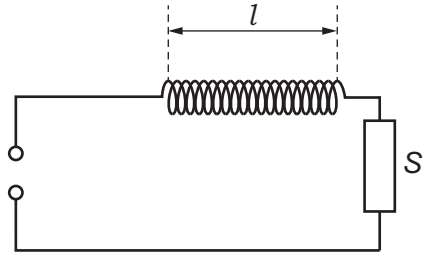

Fig. 1.1

An alternating voltage is applied to the terminals. The peak value of the alternating voltage is E and the frequency is f. The peak value of the potential difference V across the resistor is determined using an oscilloscope.

It is suggested that V is related to f by the relationship

$$\frac{ES}{V} = \frac{KAN^2f}{l}$$

where N is the number of turns on the coil and K is a constant.

Plan a laboratory experiment to test the relationship between V and f.

Draw a diagram showing the arrangement of your equipment.

Explain how the results could be used to determine a value for K.

In your plan you should include:

- the procedure to be followed
- the measurements to be taken
- the control of variables
- the analysis of the data
- any safety precautions to be taken.

DO NOT WRITE IN THIS MARGIN
DO NOT WRITE IN THIS MARGIN
DO NOT WRITE IN THIS MARGIN
DO NOT WRITE IN THIS MARGIN
DO NOT WRITE IN THIS MARGIN

Diagram

DO NOT WRITE IN THIS MARGIN
DO NOT WRITE IN THIS MARGIN
DO NOT WRITE IN THIS MARGIN
DO NOT WRITE IN THIS MARGIN
DO NOT WRITE IN THIS MARGIN

.....

.....

.....

2 A student investigates an electrical circuit.

The circuit is set up as shown in Fig. 2.1.

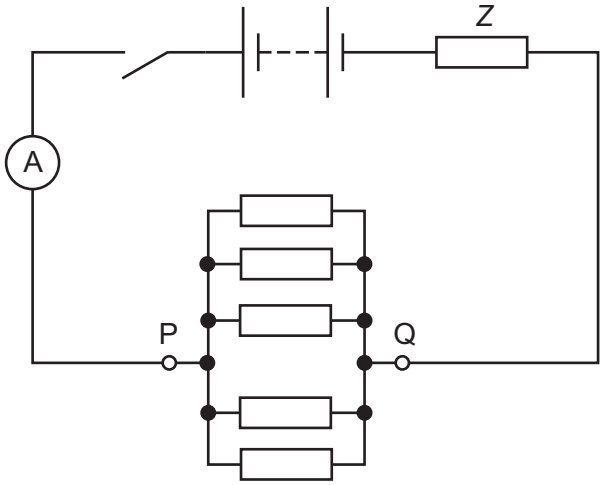

Fig. 2.1

A battery of negligible internal resistance is connected to a resistor of resistance Z. Five resistors, each of resistance R, are connected in parallel between P and Q.

The switch is closed. The total current I in the circuit is measured using the ammeter.

The experiment is then repeated by changing the number n of resistors, each of resistance R, connected in parallel between P and Q.

It is suggested that I and n are related by the equation

$$E = I\left(\frac{R}{n} + Z\right)$$

where E is the electromotive force (e.m.f.) of the battery.

(a) A graph is plotted of $\frac{1}{I}$ on the y-axis against $\frac{1}{n}$ on the x-axis.

Determine expressions for the gradient and y-intercept.

gradient = ...

y-intercept = ...

[1]

DO NOT WRITE IN THIS MARGIN

(b) Values of n, $\frac{1}{n}$ and I are given in Table 2.1.

Table 2.1

n	$\frac{1}{n}$	I/μA	$\frac{1}{I}/10^3\text{A}^{-1}$
5	0.200	455 ± 5	
6	0.167	525 ± 5	
7	0.143	580 ± 5	
8	0.125	635 ± 5	
9	0.111	685 ± 5	
11	0.0909	765 ± 5	

Calculate and record values of $\frac{1}{I}/10^3\text{A}^{-1}$ in Table 2.1. Include the absolute uncertainties in $\frac{1}{I}$. [2]

(c) (i) Plot a graph of $\frac{1}{I}/10^3\text{A}^{-1}$ against $\frac{1}{n}$. Include error bars for $\frac{1}{I}$. [2]

(ii) Draw the straight line of best fit and a worst acceptable straight line on your graph. Label both lines. [2]

(iii) Determine the gradient of the line of best fit. Include the absolute uncertainty in your answer.

gradient = ... [2]

DO NOT WRITE IN THIS MARGIN
DO NOT WRITE IN THIS MARGIN
DO NOT WRITE IN THIS MARGIN
DO NOT WRITE IN THIS MARGIN
DO NOT WRITE IN THIS MARGIN

DO NOT WRITE IN THIS MARGIN
DO NOT WRITE IN THIS MARGIN
DO NOT WRITE IN THIS MARGIN
DO NOT WRITE IN THIS MARGIN
DO NOT WRITE IN THIS MARGIN

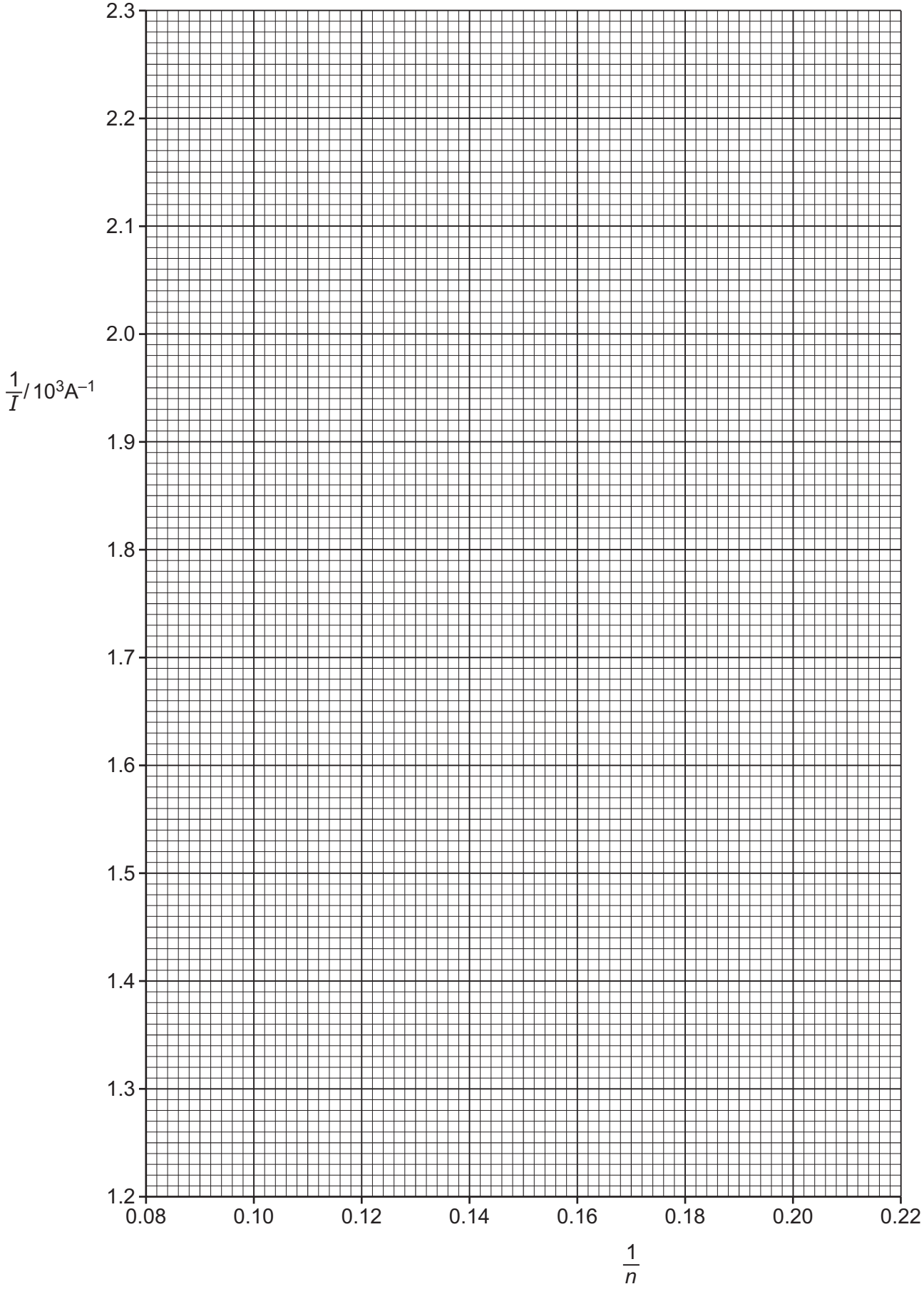

(iv) Determine the *y*-intercept of the line of best fit. Include the absolute uncertainty in your answer.

y-intercept = ... [2]

(d) The e.m.f. *E* of the battery is determined twice during the experiment. The values obtained are 5.6 V and 6.0 V.

(i) Using your answers to **(a)**, **(c)(iii)** and **(c)(iv)**, determine the values of *R* and *Z*. Include appropriate units.

R = ...

Z = ...
[2]

(ii) Determine the percentage uncertainty in your value of *R*.

percentage uncertainty = ... % [1]

(e) The experiment is repeated with 20 resistors, each of resistance *R*, connected in parallel between P and Q. Determine the total current *I* in the circuit.

I = ... A [1]

[Total: 15]

To avoid the issue of disclosure of answer-related information to candidates, all copyright acknowledgements are reproduced online in the Cambridge Assessment International Education Copyright Acknowledgements Booklet. This is produced for each series of examinations and is freely available to download at www.cambridgeinternational.org after the live examination series.

DO NOT WRITE IN THIS MARGIN
DO NOT WRITE IN THIS MARGIN
DO NOT WRITE IN THIS MARGIN
DO NOT WRITE IN THIS MARGIN
DO NOT WRITE IN THIS MARGIN